SnowSentry™

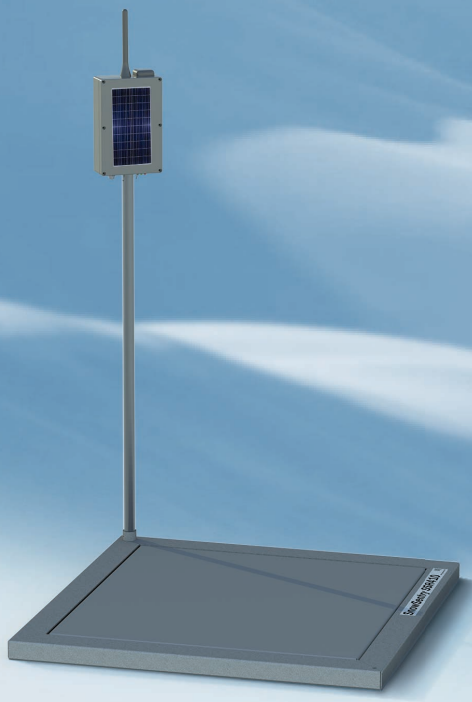

MONITOR **ALERT** RESPOND

KNOWING WHEN AND WHERE TO ACT = EFFICIENCY AND SAFETY

If your roof snow removal budget seems unmanageable, unpredictable and expensive, the SnowSentry™ is a simple and powerful solution that will monitor snow loads across large areas. SnowSentry™ technology reports the data in real-time with triggers that can be configured to alert multiple personnel when critical levels are reached.

Don't just guess - **knowing when and where to remove snow** will not only save you money, it will give you peace of mind and a sense of control.

BEST CASE SCENARIO: SAVE MONEY

Use your own staff to install and monitor the SnowSentry™ network - it's easy. Schedule targeted snow removal from your rooftops when it becomes truly necessary, rather than as an estimated precaution after a storm.

PLUG AND PLAY INSTALLATION
Each station can be installed in minutes without the need of electricians.

WIRELESS COMMUNICATIONS
No extra cables to manage and secure redundancy for data transfer using mesh networking.

SOLAR-POWERED ENERGY SYSTEM
Long-life, rechargeable units power the SnowSentry™ at night and over 60 overcast days.

HIGHLY PORTABLE UNITS
These lightweight stations can be relocated easily and use GPS to know exactly where it is.

SNOWSENTRY™ HAS YOUR BACK

The SnowSentry™ monitors and gathers the data for snow load conditions 24/7, and wirelessly reports the information to your assigned staff using an intuitive web interface and alert messages sent directly to their e-mail and mobile devices.

WORSE CASE SCENARIO: PREVENT ROOF COLLAPSE

According to a survey by Paramount Disaster Recovery, a leading nationwide disaster response and recovery contracting company, "There are over 3,000 roof collapses each year in the U.S., resulting in over 20 deaths and a widespread disruption of many business operations".

Facility managers and their service providers need to know real-time rooftop conditions to make operational decisions about snow removal and building safety.

The most common unknowns:

1. When and how much snow should be removed?
2. Where are the most critical areas on the roof?

PRODUCT AND ACCESSORY FEATURES

Each SnowSentry™ SSR410 station is easy to install out of the box - you'll be up and running before you know it.

PORTABLE & DURABLE

Weight: 35 lbs (15.9 kg)
Size: 20" x 20" x 1.5" (514mm x 514mm x 38mm)
Antenna & Power System Mast: 84" (2129mm)
Measurement Capacity is 90 PSF (440 kg/m^2)
Wind Tolerant to over 90 MPH (145 km/h)

CONNECTIVITY

A 900 MHz wireless network connects stations to the controller which is connected to the building's internet access.

GPS guarantees known position on roof.

COMMUNICATIONS

Long-range wireless protocols allows seemless data transfer using the building's internet access.

Real-time access through our web portal and customizable alerts send to responsible parties with data on current conditions.

Overloaded stations are identified on a roof map directing snow removal teams to key areas.

OPTIONAL

*** ROOF DRAIN TEMPERATURE SENSING**
Identifies freezing conditions around roof drains.

*** CELLULAR CONNECTIVITY** Used when wire-based internet access is unavailable.

*** MAST EXTENSION KIT** Used in deep snow areas such as around parapets, equipment and walls.

REMOTELY MONITOR ROOFS/CUSTOMIZE ALERT LEVELS

The SnowSentry™ will help you better understand where and how snow has accumulated on various areas of your roof as the winter progresses. Graphically display and review data over any point in time for any station on any of your buildings. Visualize loading trends and identify historically the most vulnerable regions of the roof. Monitor air and roof deck temperatures.

SnowSentry™

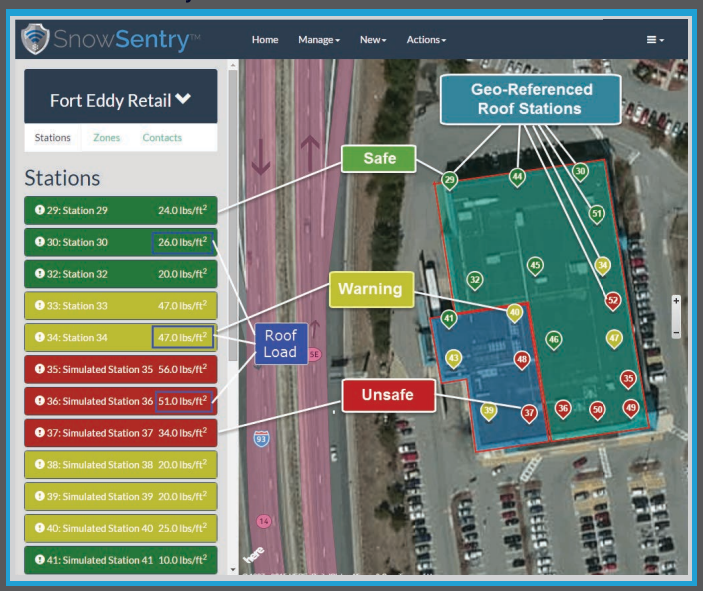

SYSTEM INSTALLATION

Setting up the wireless Measure Stations is easy. Place the aluminum mast into the receiving socket in the base unit then set the control box on top of the mast, plug in the cable and turn it on. That's it and no tools are required. The Internet Gateway (IG) is AC powered and connects to the LAN with a supplied weatherproof cable. The IG can be located on the rooftop either wall mounted or on a ballasted tripod. In many cases the 900 MHz signal is strong enough so that the IG can be mounted to a wall on the ground level.

SNOWSENTRY™ SYSTEM DIAGRAM

In this SnowSentry™ installation, wireless measurement stations are placed across the open roof areas where snow historically builds up near parapets, walls and equipment causing overload conditions. Stations are geo-located in user-defined virtual zones configured with a specific alert threshold given the roof's structural ability to handle a certain load, thus creating a very accurate and intelligent monitor. Users are notified by their mobile device or the web app when conditions reach warning and unsafe levels.

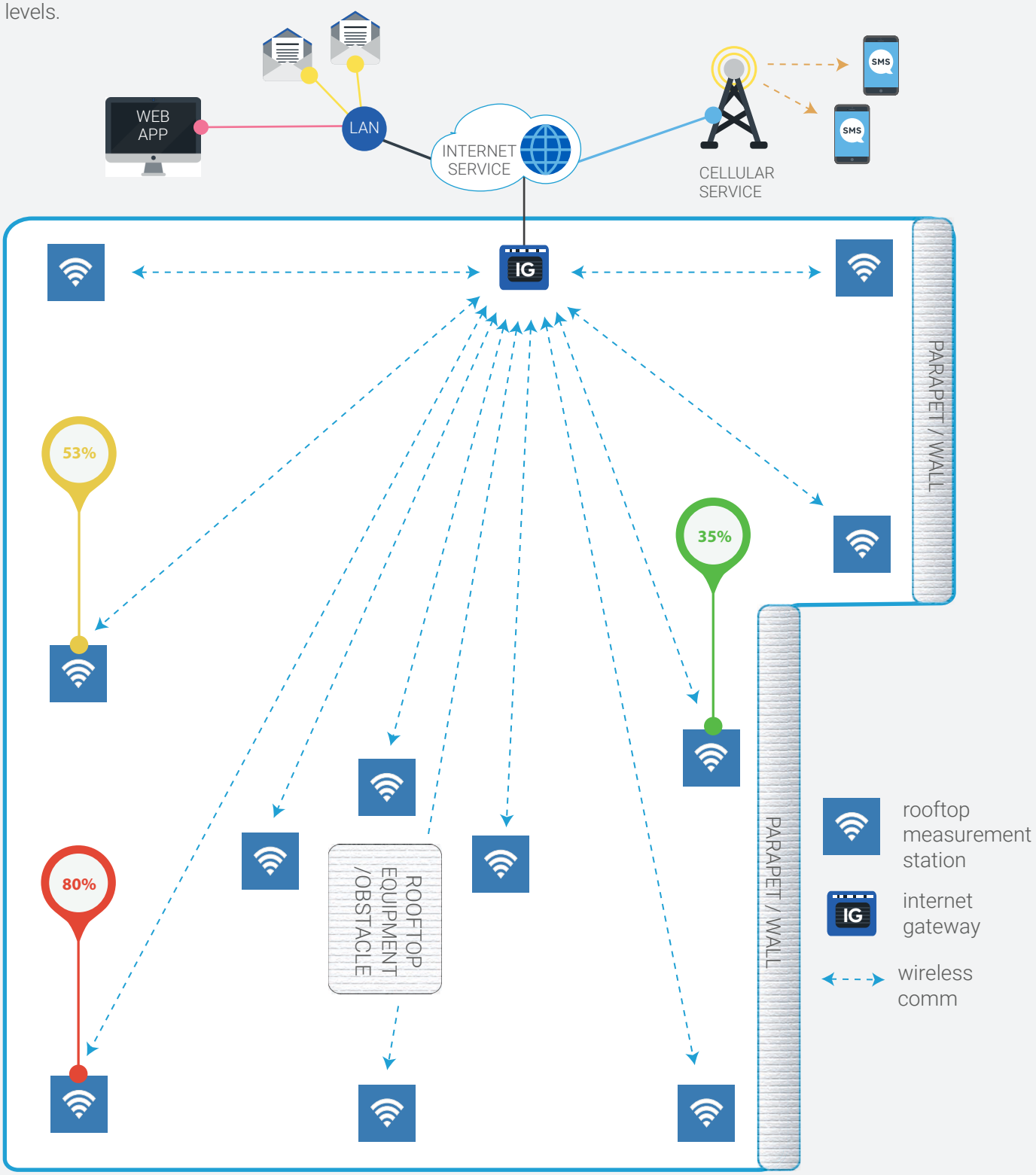

TECHNICAL SPECIFICATIONS

The values shown below are current as of September 2016.

SNOWSENTRY™ BASE UNIT

Snow Load Capacity	90 psf (440kg/m^2)
Power Input	No external, solar powered
Days Between Full Charge	60+ Days
Weight	35 lbs (15.9 kg)
Dimensions	base: 20” x 20” x 1.5” (514mm x 514mm x 38mm) antenna: 84” (2129mm)
Waterproof IP Rating	base: IP68, antenna & controller: IP67
Operating Temperature	-22° F to +140° F (-30° C to +60° C)
Wind Tolerance	Over 90 MPH (145 km/h)
Wireless Connectivity	900 MHz

INTERNET GATEWAY

Available Configurations	Wall mount and Tripod mount (optional)
Power Input	100-240VAC, <5W
Power Connection	14ft. (4m) Cable with Type B (3 pin) plug
Weight	4.9 lbs (2.2 kg)
Dimensions	18.5” x 6.3” x 3.5” (470mm x 160mm x 89mm)
Waterproof IP Rating	IP67
Wireless Connectivity	Wireless, 900 MHz
Ethernet Data Rate	10/100 Mbps (auto-sensing)
Ethernet Connection	50 ft removable, industrial grade CAT 5e cable with RJ45 connectors
Operating Temperature	-22° F to +158° F (-30° C to +70° C)
Ethernet Isolation	1500 VAC min per IEEE802.3/ANSI X3.263
Emissions/Immunity	CE, FCC Part 15 (Class A)

PRODUCT DIMENSIONS

SNOWSENTRY™ BASE UNIT

SnowSentry™ fully assembled in profile and top down footprint below

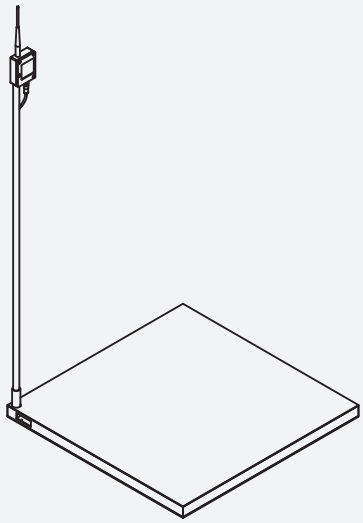

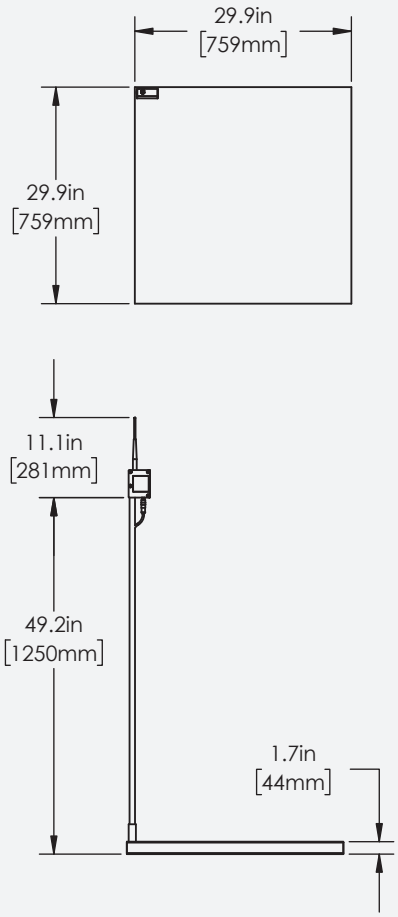

INTERNET GATEWAY

SnowSentry™ Internet Gateway (IG) installed on recommended, ballasted (non-penetrating) tripod (below)

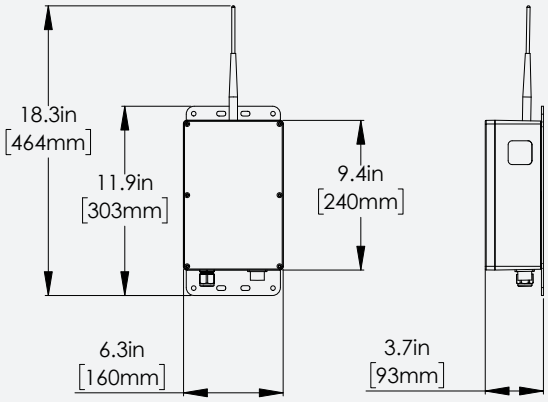

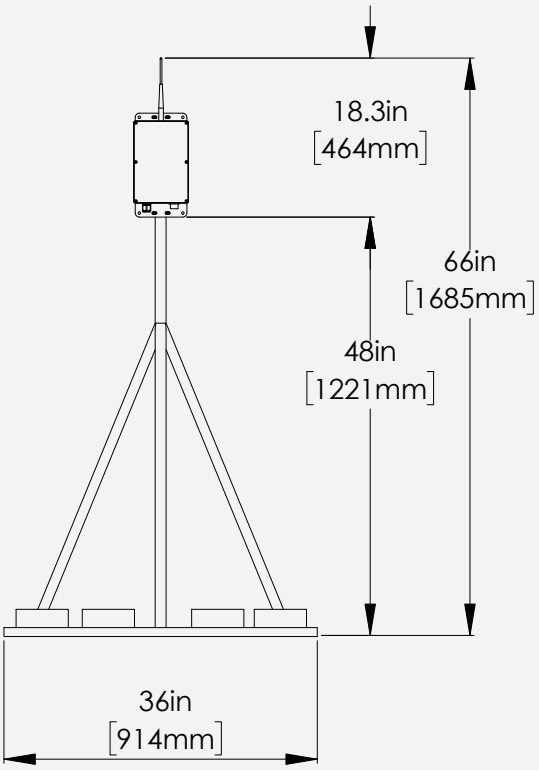

ABOUT OUR COMPANY

Our Experience Is Just the Beginning

2KR Systems designs and assembles electromechanical commercial products and offers design services where technical creativity is required.

CONTACT US

Phone: +1 603 397 3330
Email: info@2KRsystems.com
Website: 2KRsystems.com
Location: Barrington, NH USA

250221 Rev 00